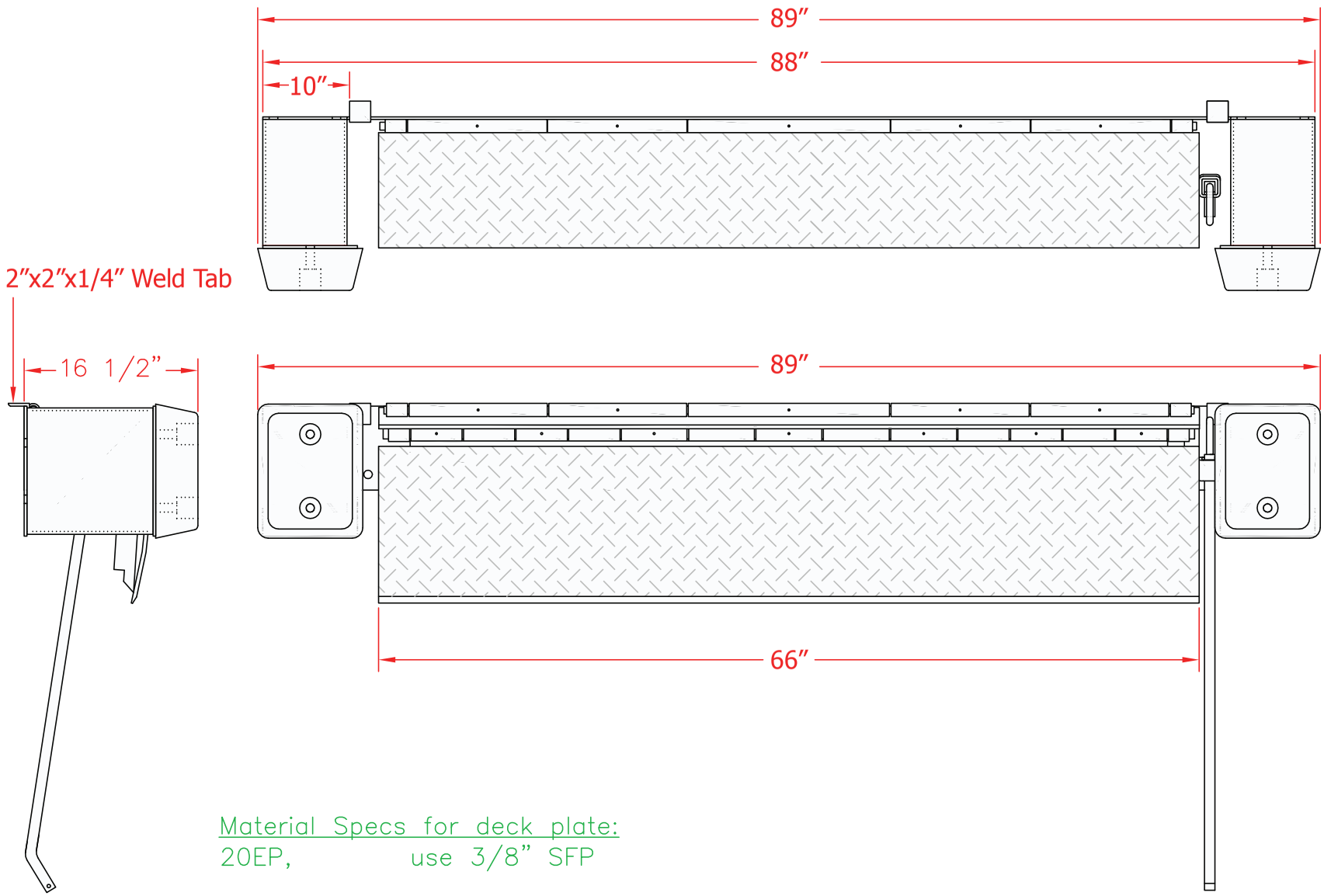

Material Specs for deck plate:
20EP, use 3/8" SFP

DOOR SIZE	DOCK HEIGHT
SLOPE	
BUMPER PROJECTION	

Loading Dock Supply LLC

TITLE

20EP66

Model	Part #	REV
SCALE		SHEET 1 OF 1

Loading Dock Supply LLC

5405 Keating Rd. NW
Olympia, Wa 98502

: 800-741-1258
: 866-709-2802
: Sales@loadingdocksupply.com
: www.loadingdocksupply.com

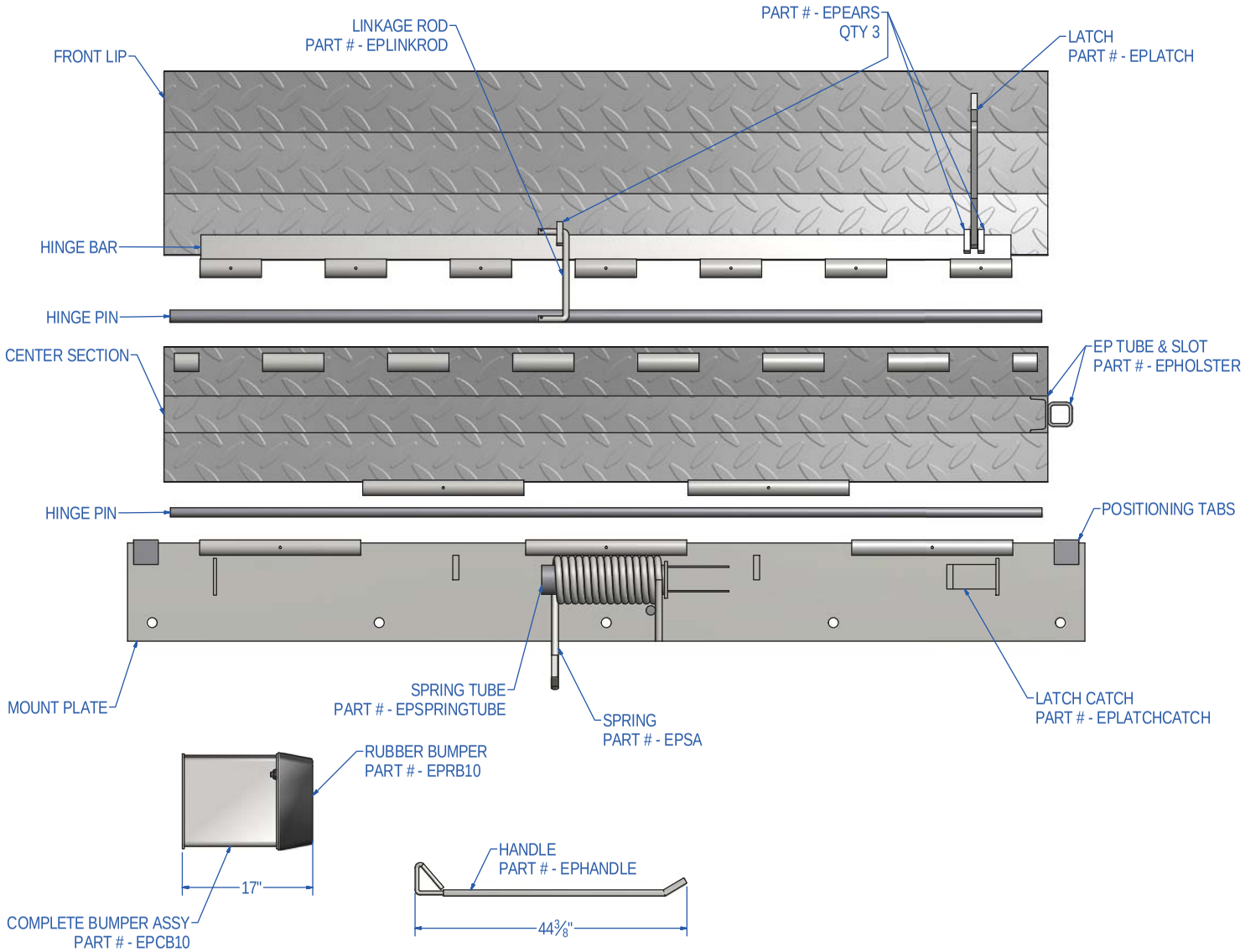

Loading Dock Supply LLC

5405 Keating Rd. NW
Olympia, Wa 98502

: 800-741-1258
: 866-709-2802
: Sales@loadingdocksupply.com
: www.loadingdocksupply.com

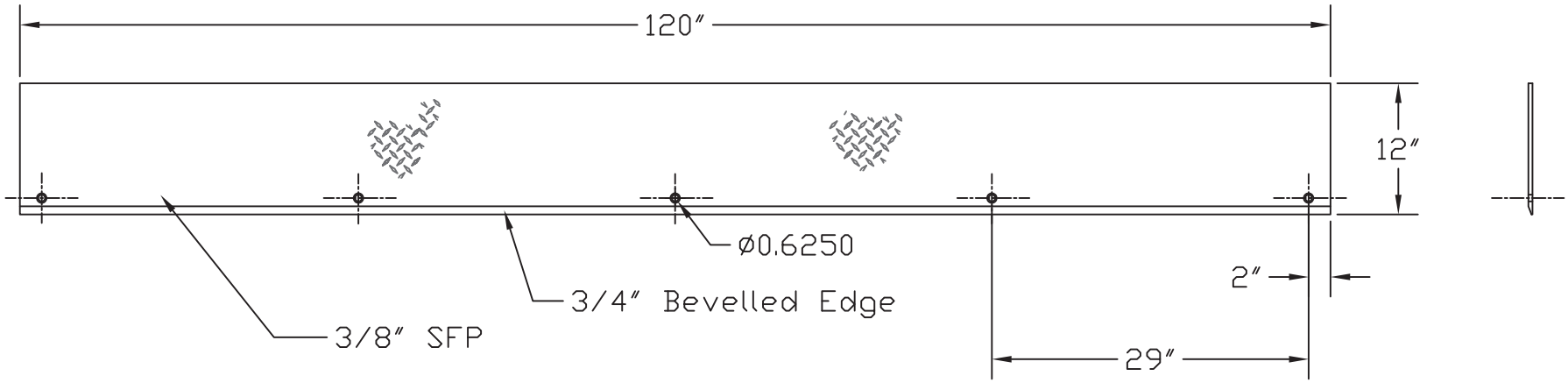

MODEL:	APPROACH PLATE	CUSTOMER:	
PART NO:	EPAP12	REV. LEVEL:	
MATERIAL:	A36, 3/8″ SFP	DRAWN:	HMR
WEIGHT:	164 lbs	DATE:	05 JUNE 07